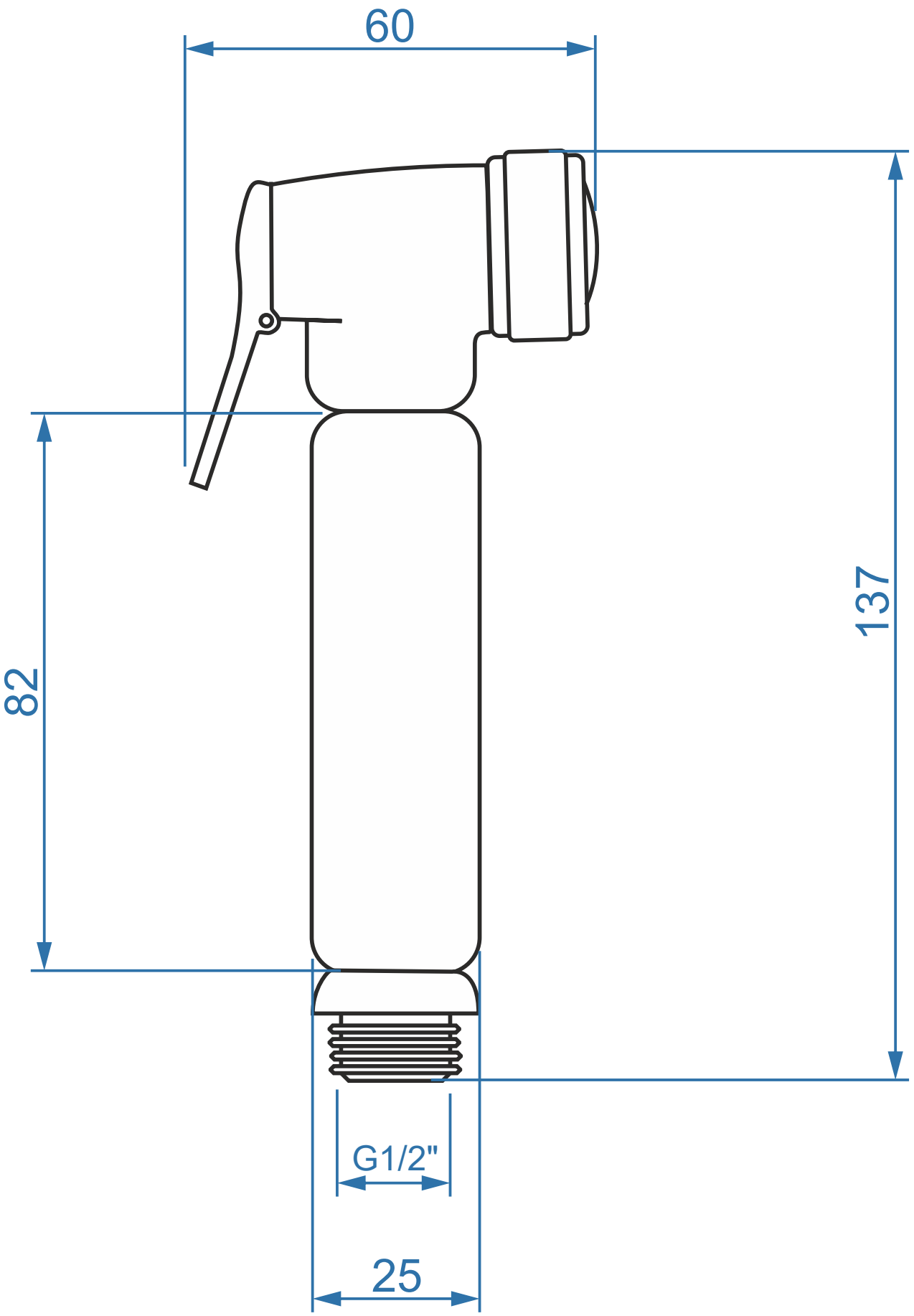
60
82
137
G1/2"
25