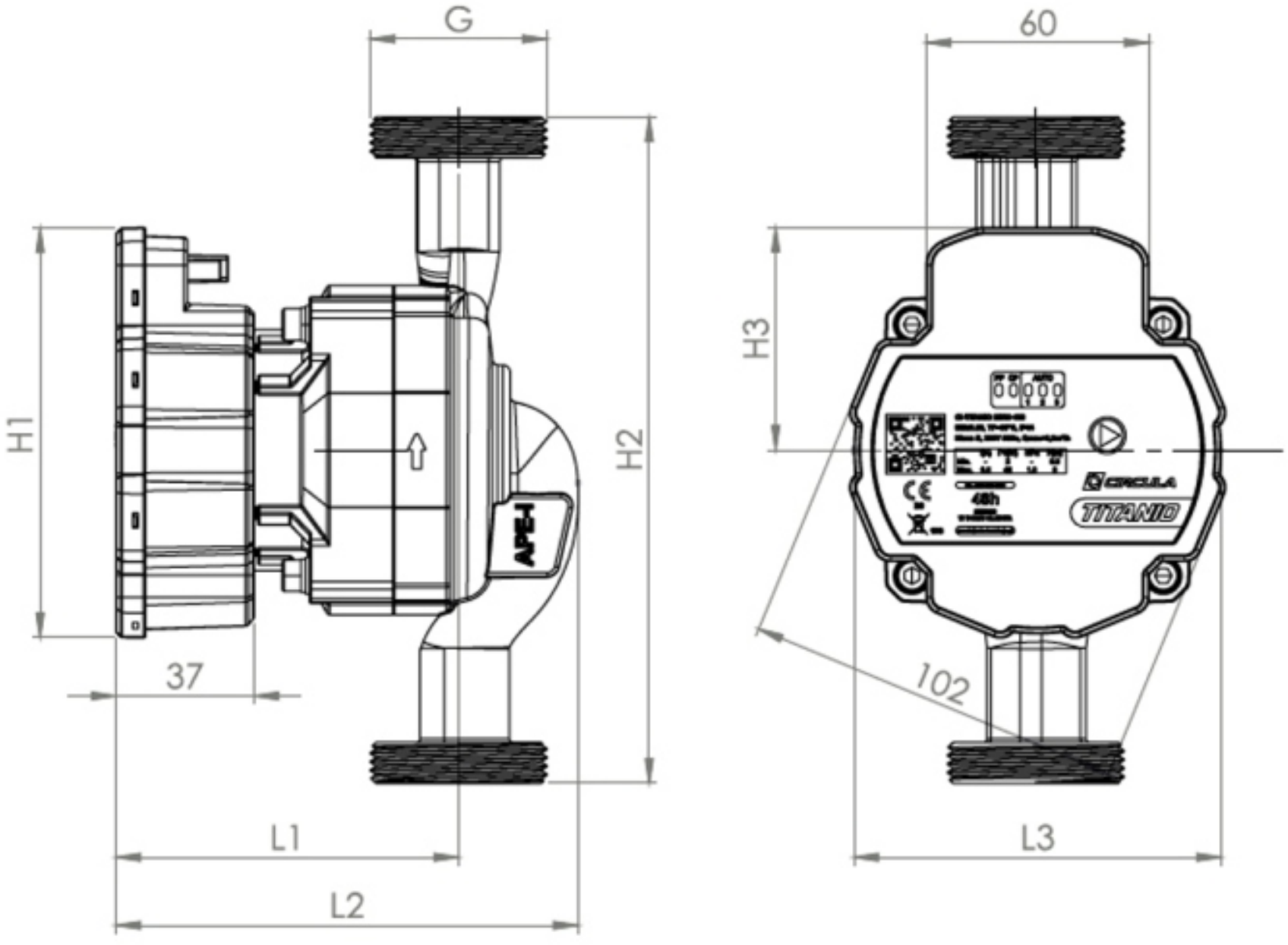
G
60
H1
H2
H3
37
102
L1
L2
L3
APE-1
CIRCULA
TITANIO